Published: 11-May-2011

# Engine Cooling - I6 3.2L Petrol -

**Lubricants, Fluids, Sealers and Adhesives**

| Item | Specification |
|---|---|
| Anti-freeze | Texaco Extended Life Coolant (XLC) or any glycol based anti-freeze containing no methanol with only Organic Acid Technology (OAT) corrosion inhibitors |
| Anti-freeze concentration - Will provide frost protection to -40°C (-40°F) | 50% |
| Specific gravity of coolant at 20°C (68°F), to protect against frost down to -40°C (-40°F) | 1.068 |
| **Amount of anti-freeze to use for 50% concentration:** | 4.0 liters |

**Capacities**

| Item | Capacity (liters/pints/US quarts) |
|---|---|
| Cooling system capacity | 8.0/14.0/8.5 |

**General Specification**

| Item | Specification |
|---|---|
| **Cooling fan:** | |
| Standard fit - Single fan | 500W |
| Hot climate - Twin fan | 750W |
| Cooling system type | Pressurised, thermostatically controlled with remote header tank |
| Expansion tank | Seeber with integrated level sensor |
| Radiator | Valeo 28mm core with integrated drain cock and replaceable lower pin |
| Thermostat | Wax element |
| Starts to open | 90° C |
| Fully open | 100° C |

**Torque Specifications**

| Description | Nm | lb-ft |
|---|---|---|
| Coolant expansion tank bolt | 10 | 7 |
| Coolant pump bolts | 17 | 13 |
| Coolant pump pulley bolts | 10 | 7 |
| Radiator bolts | 6 | 5 |
| Radiator drain plug | 7 | 6 |
| Thermostat housing bolts | 10 | 7 |
| Water inlet pipe bolts | 17 | 13 |
| Water inlet pipe drain nipple | 7 | 5 |
| Water outlet to block bolt | 10 | 7 |

mcx30.com

Published: 11-May-2011

# Engine Cooling - I6 3.2L Petrol - Engine Cooling

Description and Operation

## COMPONENT LOCATION

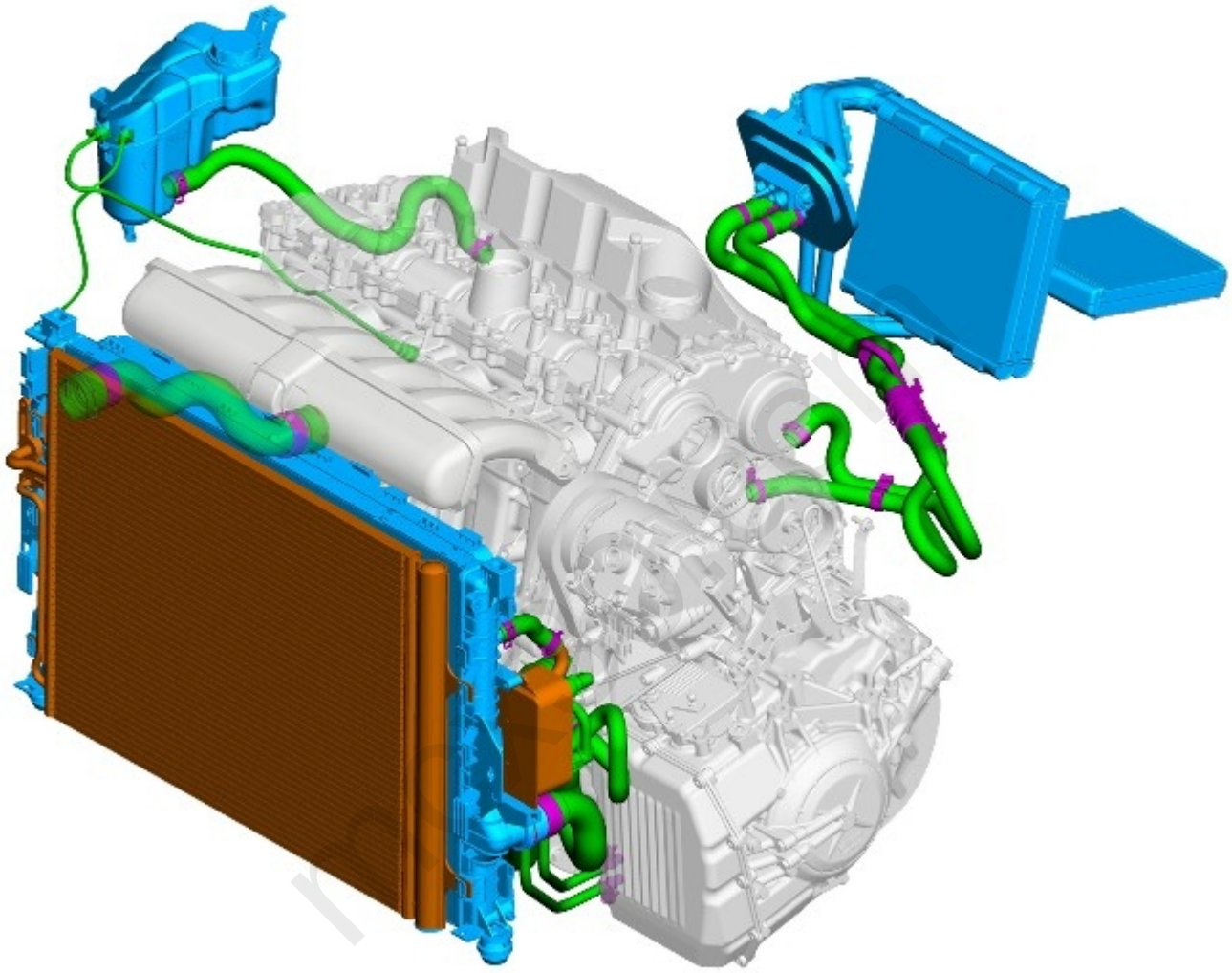

E79459

## OVERVIEW

Because of its powerful engine, sophisticated transmission and traction system; the vehicle in the most demanding conditions will need to continually dissipate as much as 120 kW of heat to atmosphere. To compound the situation this typically occurs at low speeds when there is insufficient air being forced through the radiator to aid the cooling system. With this in mind and considering that the majority of vehicles rarely need to dissipate more than 10 kW of heat, the cooling system has been specially developed to cope with the severity of off-road driving and variable extremes of climate.

The cooling system functions using the cross-flow principle. The coolant is routed from the coolant pump into the engine block on the exhaust side of the engine and leaves the engine block at the rear edge, via the thermostat housing, on the intake side.

The thermostat is a wax thermostat. The coolant temperature sensor is located in the thermostat housing.

The coolant is pumped from the coolant pump to the engine through 2 connections. After passing through the engine, some of the coolant exits the engine block at the rear edge of the exhaust side to be routed through the passenger compartment element and onwards to the coolant pump.

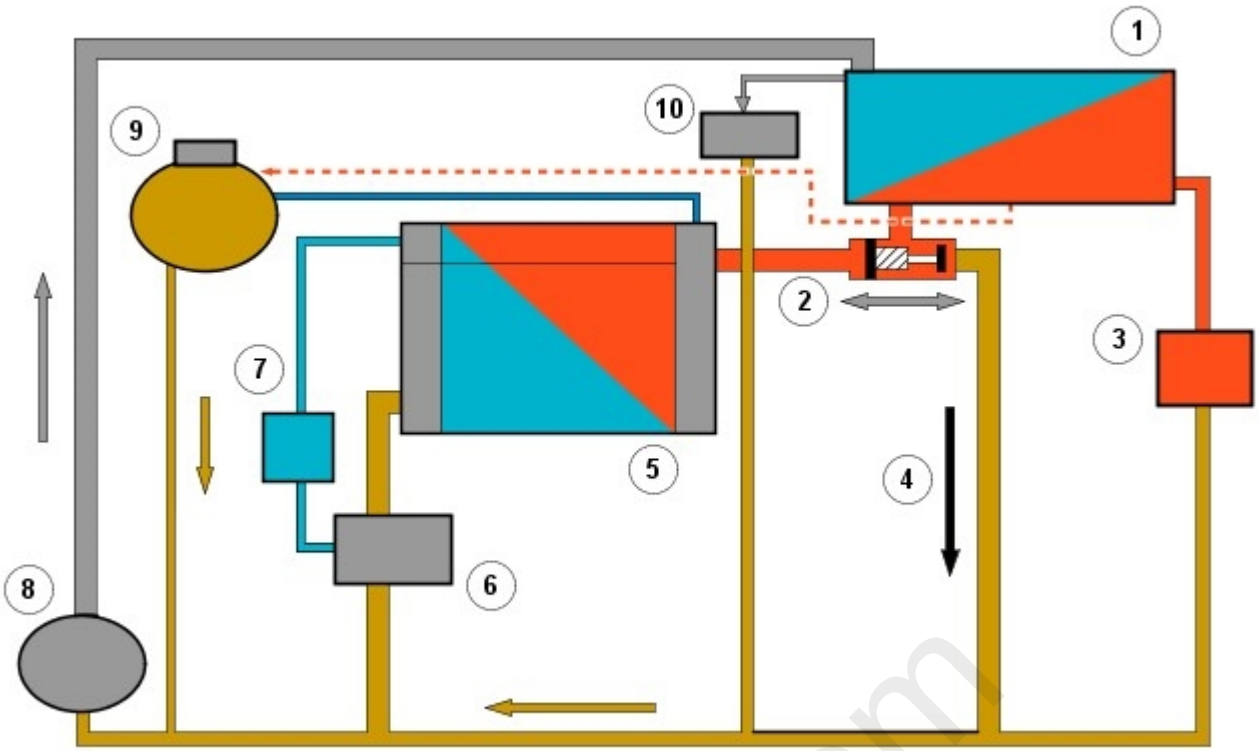


E79460

| Item | Part Number | Description |
|---|---|---|
| 1 | - | Engine |
| 2 | - | Thermostat |
| 3 | - | Cabin heater core |
| 4 | - | By-pass |
| 5 | - | Radiator |
| 6 | - | Venturi exit |
| 7 | - | Transmission oil cooler |
| 8 | - | Coolant pump |
| 9 | - | Coolant expansion tank |
| 10 | - | Engine oil cooler |

## PRINCIPLES OF OPERATION

At idle, and low outdoor temperatures (lower than -10°C (14°F)) the engine's idle speed increases from approximately 650 rpm to approximately 750 rpm. This is to increase the coolant flow through the passenger compartment element, which, in turn, makes it possible to increase the heat in the passenger compartment. The coolant pump is driven by the power steering pump through a flange.

### Coolant Flow - Closed Thermostat

Coolant leaves the engine block via the 2 circuits at the rear edge on the intake side of the engine.

- The coolant is routed from one of the circuits to the engine's oil cooler and onwards to the coolant pump.
- Coolant is routed from the other circuit to a 'by-pass' circuit where there is a valve. The valve is closed at engine speeds up to approximately 1500 rpm. At approximately 1500 rpm, the valve opens and coolant passes through the circuit. By keeping the valve closed at low engine speeds, a sufficient flow is guaranteed through the passenger compartment element to obtain a good climate (sufficient heat) in the passenger compartment.

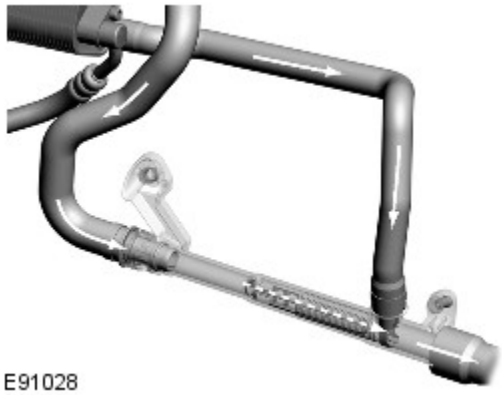


### Coolant Flow - Open Thermostat

- When the thermostat opens, coolant is also routed to the radiator
- The radiator has an inlet on the Right Hand (RH) side and 2 outlets on the left-hand side
- The greater volume of cooled coolant is routed at the radiator's lower outlet to the coolant pump
- At the upper outlet some of the coolant is routed to the automatic transmission's oil cooler. Before the coolant reaches the oil cooler, it passes a 'choke' circuit through the radiator with a lower (slower) flow than other coolants. This provides optimum cooling of the coolant before it reaches the oil cooler, which in turn, provides effective cooling of the transmission oil. The coolant is routed from the oil cooler onwards to the coolant pump.

### Bleeding

The engine has 2 bleed circuits connected to the expansion tank. One is located on the radiator and the other on the cylinder head.

### Radiator and Cooling Fan(s)

The radiator, which dissipates heat from the engine coolant and engine mounted oil cooler, is manufactured from a 27 mm aluminum matrix with high-pressure injection molded end tanks.

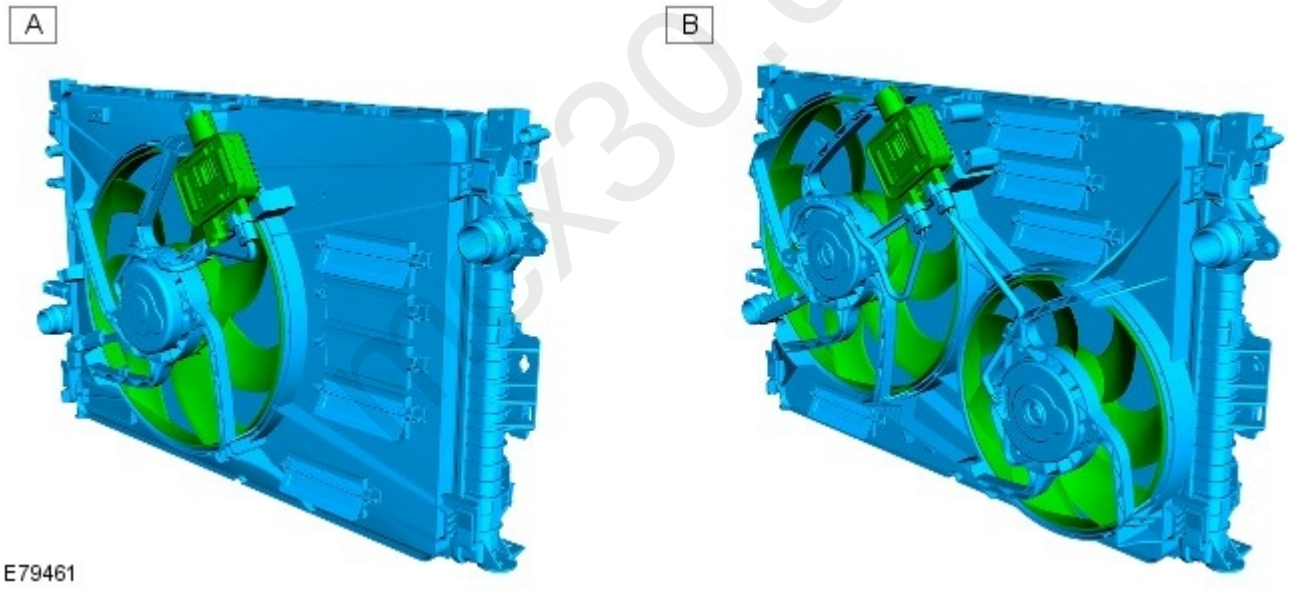


| Item | Part Number | Description |
|---|---|---|
| A | - | Cold to mild climate radiator |
| B | - | Hot climate radiator |

Dependant on climate conditions there are 2 specifications of radiator fan available:

- Cold to mild climates: a single fan unit designed around a 500W motor
- Hot climates: a twin fan unit features two motors delivering a total of 750W

Common to both fan types are:

- Electric motors with brushes
- The Engine Control Module (ECM) controls the fan speed via Pulse Width Modulation (PWM) signals to the Electronic Fan Control Module (EFCM)
- The fan speed is controlled at 4 levels:
  - Run-on occurs in 3 stages (i.e. depressing the fan speed)
  - The engine cooling fan is activated a certain time after the engine has been switched off to protect various engine components from overheating
  - The time the fan is activated and the speed of the fan is dependent on the coolant temperature and the driver's driving style (engine load) when the engine is switched off
  - The hotter the engine and the hotter the load, the higher the fan speed and the longer run-on time. The

maximum time of run-on is 360 seconds
- The EFCM can, by modulating the PWM control signal, inform the ECM about the fan's status and any faults.

PWM control of the fan motor provides variable control of fan speed to ensure minimum fan noise and reduced energy consumption when fan operation is required. The control module is mounted above the wade water entry lines
For additional information, refer to: Electronic Engine Controls (303-14A Electronic Engine Controls - I6 3.2L Petrol, Description and Operation).

The coolant expansion tank provides an expansion volume and permits easy in-service bleeding of the cooling system. Coolant level sensing is precise to provide early warning in the event of low coolant level. To prevent intrusion into the expansion tank's casing, which could be a potential leak path, a magnetic float within the tank activates a switch located outside the tank.

mcx30.com

Published: 11-May-2011

# Engine Cooling - I6 3.2L Petrol - Engine Cooling

Diagnosis and Testing

## Principles of Operation

For a detailed description of the cooling system, refer to the relevant Description and Operation section in the workshop manual.
REFER to: Engine Cooling (303-03A Engine Cooling - I6 3.2L Petrol, Description and Operation).

## Inspection and Verification

CAUTION: Diagnosis by substitution from a donor vehicle is **NOT** acceptable. Substitution of control modules does not guarantee confirmation of a fault, and may also cause additional faults in the vehicle being tested and/or the donor vehicle.

1. **1.** Verify the customer concern.
2. **2.** Visually inspect for obvious signs of mechanical or electrical damage.

**Visual Inspection**

| Mechanical | Electrical |
|---|---|
| • Coolant leaks<br>• Coolant expansion tank<br>• Electric fan<br>• Radiator | • Fuse<br>• Wiring harness<br>• Loose or corroded connector(s)<br>• Engine Coolant Temperature (ECT) sensor |

3. **3.** If an obvious cause for an observed or reported concern is found, correct the cause (if possible) before proceeding to the next step
4. **4.** If the cause is not visually evident, verify the symptom and refer to the Symptom Chart, alternatively, check for Diagnostic Trouble Codes (DTCs) and refer to the DTC Index.

## Symptom Chart

| Symptom | Possible Cause | Action |
|---|---|---|
| Coolant loss | • Hoses<br>• Hose connections<br>• Radiator<br>• Coolant pump<br>• Heater core<br>• Gaskets<br>• Engine casting cracks<br>• Engine block core plugs | • GO to Pinpoint Test A. |
| Engine overheating | • Engine coolant (level/condition)<br>• Thermostat<br>• Fan motor<br>• Fan motor fuses and/or circuits<br>• ECT sensor<br>• Engine control module (ECM)<br>• Fan speed module | • GO to Pinpoint Test B. |
| Engine not reaching normal operating temperature | • Thermostat<br>• Electric fan<br>• Fan speed module | • GO to Pinpoint Test C. |

## DTC Index

• NOTE: If the control module or a component is suspect and the vehicle remains under manufacturer warranty, refer to the Warranty Policy and Procedures manual (section B1.2), or determine if any prior approval programme is in operation, prior to the installation of a new module/component.

• NOTE: Generic scan tools may not read the codes listed, or may read only five digit codes. Match the five digits from the scan tool to the first five digits of the seven digit code listed to identify the fault (the last two digits give extra information read by the manufacturer approved diagnostic system).

• NOTE: When performing voltage or resistance tests, always use a digital multimeter (DMM) accurate to three decimal places, and with a current calibration certificate. When testing resistance, always take the resistance of the DMM leads into account.

• NOTE: Check and rectify basic faults before beginning diagnostic routines involving pinpoint tests.

• NOTE: If DTCs are recorded and, after performing the pinpoint tests, a fault is not present, an intermittent concern may be the cause. Always check for loose connections and corroded terminals.

| DTC | Description | Possible Cause | Action |
|---|---|---|---|
| P011600 | Engine coolant temperature sensor 1 circuit range/performance | • Engine coolant temperature (ECT) sensor 1 circuit: high | Check the ECT sensor and circuits. Refer to the electrical guides. Install a |

mcx30.com

| DTC | Description | Possible Cause | Action |
|---|---|---|---|
| | | resistance<br>• Engine coolant temperature (ECT) sensor failure | new sensor as required.<br>REFER to: Engine Coolant Temperature (ECT) Sensor (303-14A Electronic Engine Controls - I6 3.2L Petrol, Removal and Installation). |
| P011621 | Engine coolant temperature sensor 1 circuit range/performance - signal amplitude less than minimum | • Engine coolant temperature (ECT) sensor 1 circuit: short circuit to ground<br>• Engine coolant temperature (ECT) sensor 1 circuit: open circuit<br>• Engine coolant temperature (ECT) sensor failure | Check the ECT sensor and circuits. Refer to the electrical guides. Install a new sensor as required.<br>REFER to: Engine Coolant Temperature (ECT) Sensor (303-14A Electronic Engine Controls - I6 3.2L Petrol, Removal and Installation). |
| P011622 | Engine coolant temperature sensor 1 circuit range/performance - signal amplitude greater than maximum | • Engine coolant temperature (ECT) sensor 1 circuit: short circuit to power<br>• Engine coolant temperature (ECT) sensor failure | Check the ECT sensor and circuits. Refer to the electrical guides. Install a new sensor as required.<br>REFER to: Engine Coolant Temperature (ECT) Sensor (303-14A Electronic Engine Controls - I6 3.2L Petrol, Removal and Installation). |
| P011700 | Engine coolant temperature sensor 1 circuit low | • Engine coolant temperature (ECT) sensor 1 circuit: short circuit to ground<br>• Engine coolant temperature (ECT) sensor 1 circuit: open circuit<br>• Engine coolant temperature (ECT) sensor failure | Check the ECT sensor and circuits. Refer to the electrical guides. Install a new sensor as required.<br>REFER to: Engine Coolant Temperature (ECT) Sensor (303-14A Electronic Engine Controls - I6 3.2L Petrol, Removal and Installation). |
| P011800 | Engine coolant temperature sensor 1 circuit high | • Engine coolant temperature (ECT) sensor 1 circuit: short circuit to power<br>• Engine coolant temperature (ECT) sensor 1 circuit: open circuit<br>• Engine coolant temperature (ECT) sensor failure | Check the ECT sensor and circuits. Refer to the electrical guides. Install a new sensor as required.<br>REFER to: Engine Coolant Temperature (ECT) Sensor (303-14A Electronic Engine Controls - I6 3.2L Petrol, Removal and Installation). |
| P012500 | Insufficient coolant temperature for closed-loop fuel control | • Damaged/Faulty coolant thermostat<br>• Cooling fan fault<br>• Engine coolant temperature sensor circuit: high resistance<br>• Engine coolant temperature sensor failure | Check the cooling system operation. Rectify as necessary. Check for DTCs indicating a coolant temperature sensor fault. |
| P012800 | Coolant thermostat (coolant temperature below thermostat regulating temperature) | • Damaged/Faulty coolant thermostat<br>• Cooling fan fault<br>• Engine coolant temperature sensor circuit: high resistance<br>• Engine coolant temperature sensor failure | Check the cooling system operation. Rectify as necessary. Check for DTCs indicating a coolant temperature sensor fault. |
| P145C68 | Fan system component error | • Cooling fan control module temperature failure | No action necessary. Code for information only. |
| P145D68 | Fan system component error B | • Cooling fan control module high temperature indication | No action necessary. Code for information only. |

## Pinpoint Tests

| PINPOINT TEST A : LOSS OF COOLANT | |
|---|---|
| **TEST CONDITIONS** | **DETAILS/RESULTS/ACTIONS** |
| **A1: VISUAL INSPECTION** | |
| | 1 Visually inspect for loss of coolant. |
| | 2 Carry out a system pressure test. See component tests in this section. |
| | Is the engine cooling system leaking?<br>**Yes**<br>Rectify the leak as indicated by the test result. Top-up and fill the cooling system to the correct level with the correct specification fluid as necessary.<br>REFER to: Specifications (303-03A Engine Cooling - I6 3.2L Petrol, Specifications) / Cooling System Draining, Filling and Bleeding (303-03A Engine Cooling - I6 3.2L Petrol, General Procedures).<br>TEST the system for correct operation.<br>**No**<br>Verify the customer complaint. |

| PINPOINT TEST B : THE ENGINE OVERHEATS | |
|---|---|
| **TEST CONDITIONS** | **DETAILS/RESULTS/ACTIONS** |
| **B1: CHECK COOLANT** | |
| WARNING: The cooling system is pressurized! Ensure the reservoir cap is never released until the system has cooled. Failure to follow these instructions may result in personal injury. | |
| | 1 Check the coolant level and condition. |
| | Does the system contain sufficient coolant of the correct specification?<br>**Yes**<br>GO to B2.<br>**No**<br>Top-up and fill the cooling system to the correct level with the correct specification fluid as necessary.<br>REFER to: Specifications (303-03A Engine Cooling - I6 3.2L Petrol, Specifications) / Cooling System Draining, Filling and Bleeding (303-03A Engine Cooling - I6 3.2L Petrol, General Procedures).<br>Check for coolant loss. GO to B1. |
| **B2: CHECK COOLANT EXPANSION TANK PRESSURE CAP** | |
| | 1 Check the coolant expansion tank pressure cap for damage/correct operation. REFER to the coolant expansion tank pressure cap pressure test in this section. |
| | Is the coolant expansion tank pressure cap operating correctly?<br>**Yes**<br>GO to B3.<br>**No**<br>INSTALL a new coolant expansion tank pressure cap. TEST the system for correct operation. |
| **B3: CHECK THERMOSTAT** | |
| | 1 Check the thermostat for correct operation. REFER to the thermostat component test in this section. |
| | Is the thermostat operating correctly?<br>**Yes**<br>Check for correct operation of cooling fans, circuits, sensors, modules, etc.<br>REFER to: Electronic Engine Controls (303-14A Electronic Engine Controls - I6 3.2L Petrol, Diagnosis and Testing).<br>**No**<br>INSTALL a new thermostat.<br>REFER to: Thermostat (303-03A Engine Cooling - I6 3.2L Petrol, Removal and Installation).<br>TEST the system for correct operation. |

| PINPOINT TEST C : THE ENGINE DOES NOT REACH NORMAL OPERATING TEMPERATURE | |
|---|---|
| **TEST CONDITIONS** | **DETAILS/RESULTS/ACTIONS** |
| **C1: CHECK THERMOSTAT** | |
| | 1 Check the thermostat for correct operation. REFER to the thermostat component test in this section. |
| | Is the thermostat operating correctly?<br>**Yes**<br>Check for correct operation of cooling fans, circuits, sensors, modules, etc.<br>REFER to: Electronic Engine Controls (303-14A Electronic Engine Controls - I6 3.2L Petrol, Diagnosis and Testing).<br>**No**<br>INSTALL a new thermostat.<br>REFER to: Thermostat (303-03A Engine Cooling - I6 3.2L Petrol, Removal and Installation).<br>TEST the system for correct operation. |

## Component Tests

### Cooling System Pressure Test

WARNING: Never, under any circumstances, remove the coolant expansion tank pressure cap while the engine is operating. To avoid having scalding hot water or steam blow out of the cooling system, use extreme care when removing the coolant expansion tank pressure cap from a hot cooling system. Wait until the engine has cooled, then wrap a thick cloth around the coolant expansion tank pressure cap and turn it slowly until the pressure begins to release, step back while the pressure is released from the system. When certain all the pressure has been released (still with a cloth) turn and remove the coolant expansion tank pressure cap. Failure to follow these instructions may result in damage to the cooling system, engine and/or cause personal injury.

1. **1.** Switch the engine off.
2. **2.** Open the hood and install protective fender covers.
3. **3.** Carefully remove the coolant expansion tank pressure cap from the coolant expansion tank to relieve pressure in the cooling system. Add coolant to coolant expansion tank as necessary.
4. **4.** Install the pressure tester equipment to the cooling system following manufacturers instructions. Reinstall the coolant expansion tank pressure cap (if pressure test equipment is not installed to the coolant expansion tank).
5. **5.** Pressurize the cooling system to the coolant expansion tank pressure cap lower limit.
6. **6.** Observe the gauge reading for approximately two minutes. Pressure should not drop during this time.
   - If system holds pressure, continue from step 8.

- If the pressure drops, check the complete cooling system for leaks. Also refer to engine system checks if a leak cannot be located in the cooling system. Correct any leaks found and recheck the system.

7. **7.** Release the system pressure and remove the pressure test equipment. Check the coolant level. Replenish as necessary with the correct coolant solution.
   REFER to: Specifications (303-03A Engine Cooling - I6 3.2L Petrol, Specifications).

8. **8.** Check the radiator overflow hose for any obstructions which may block the flow of coolant either to or from the coolant expansion tank.

9. **9.** Conduct the coolant expansion tank pressure cap pressure test in this section.

### Coolant Expansion Tank Pressure Cap Pressure Test

WARNING: Never, under any circumstances, remove the coolant expansion tank pressure cap while the engine is operating. To avoid having scalding hot water or steam blow out of the cooling system, use extreme care when removing the coolant expansion tank pressure cap from a hot cooling system. Wait until the engine has cooled, then wrap a thick cloth around the coolant expansion tank pressure cap and turn it slowly until the pressure begins to release, step back while the pressure is released from the system. When certain all the pressure has been released (still with a cloth) turn and remove the coolant expansion tank pressure cap. Failure to follow these instructions may result in damage to the cooling system, engine and/or cause personal injury.

1. **1.** Remove the expansion tank pressure cap from the coolant expansion tank.

2. **2.** Use water to clean cap in area of rubber seal and vacuum relief valve. Following manufacturers instructions, install the coolant expansion tank pressure cap to the pressure tester.

3. • NOTE: If the pressure tester is pressurised too quickly, an erroneous pressure reading may result.

   **3.** Slowly pressurise the system until the pressure gauge reading stops increasing, and note highest pressure reading obtained.

4. **4.** Release pressure and repeat Step 3 at least twice to make sure the pressure test reading is repeatable and within specification.

5. **5.** If the pressure test gauge readings are not within specification, install a new coolant expansion tank pressure cap.

### Thermostat Test

Remove the thermostat
REFER to: Thermostat (303-03A Engine Cooling - I6 3.2L Petrol, Removal and Installation).
Inspect for visible damage, note its opening temperature and immerse it in water. Heat the water until this temperature is reached. The thermostat should begin to open. If it does not begin to open, install a new thermostat.
REFER to: Thermostat (303-03A Engine Cooling - I6 3.2L Petrol, Removal and Installation).
If thermostat begins to open, continue to heat the water until the thermostat fully opens, 5.8 mm (0.2 in) or more off the seat. If it does not fully open, install a new thermostat.
REFER to: Thermostat (303-03A Engine Cooling - I6 3.2L Petrol, Removal and Installation).

### Radiator Leak Test - Removed from the Vehicle

CAUTION: Do not leak test an aluminium radiator in the same water that is used to leak test copper/brass radiators. Flux and caustic cleaners may be present in the test water which will corrode aluminium. If a separate tank is not available, drain and rinse the test tank before testing an aluminium radiator.

Clean the radiator before leak testing to prevent contamination of the test tank. Leak test the radiator in clean water with 138 kPa (20 psi) air pressure.

Published: 11-May-2011

# Engine Cooling - I6 3.2L Petrol - Cooling System Draining, Filling and Bleeding

General Procedures

WARNING: Since injury such as scalding could be caused by escaping steam or coolant, do not remove the filler cap from the coolant expansion tank while the system is hot.

1. Position the vehicle on a lift.

2. Set the heater controls to maximum.

3. Remove the engine undershield.

   Refer to: Engine Undershield (501-02 Front End Body Panels, Removal and Installation).

4. Disconnect the battery ground cable.

   Refer to: Specifications (414-00 Battery and Charging System - General Information, Specifications).

5. **5.** WARNING: Since injury such as scalding could be caused by escaping steam or coolant, do not remove the filler cap from the coolant expansion tank while the system is hot.

   Remove the coolant expansion tank cap.

6. Position a container to collect the fluid.

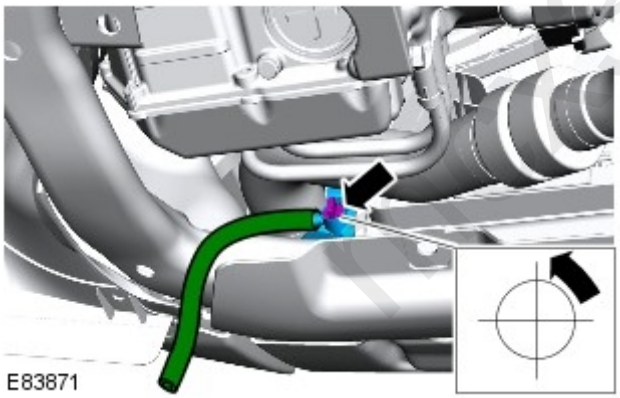


7. Attach a hose to the radiator drain tap. Open the tap.

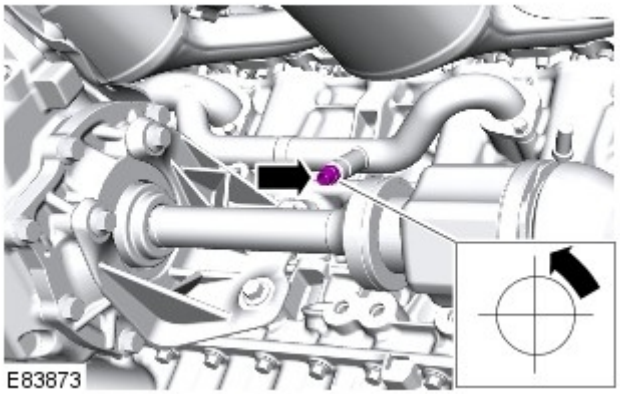


8. Loosen the engine drain tap.

9. Close the radiator drain tap and remove the hose.

10. Tighten the engine drain tap.

*Torque:* 7 Nm

11. Connect the battery ground cable.

    Refer to: Specifications (414-00 Battery and Charging System - General Information, Specifications).

12. Connect exhaust extraction hoses to the tail pipes.

13. Refill the cooling system.

14. Start the engine and continue to fill the coolant until the maximum level is reached.

15. Install the coolant expansion tank cap.

16. Allow the engine to idle, until hot air is emitted at the face registers.

17. Switch the engine off and allow to cool.

18. Clean any spilt coolant from the vehicle.

19. Check and top-up the coolant if required.

20. Install the engine undershield.

    Refer to: Engine Undershield (501-02 Front End Body Panels, Removal and Installation).

mcx30.com

Published: 11-May-2011

# Engine Cooling - I6 3.2L Petrol - Thermostat

Removal and Installation

## Removal

- NOTE: Removal steps in this procedure may contain installation details.

1. **1.** WARNING: Do not work on or under a vehicle supported only by a jack. Always support the vehicle on safety stands.

   Raise and support the vehicle.

2. Remove the intake manifold assembly.

   Refer to: Intake Manifold (303-01A Engine - I6 3.2L Petrol, Removal and Installation).

3. Drain the cooling system.

   Refer to: Cooling System Draining, Filling and Bleeding (303-03A Engine Cooling - I6 3.2L Petrol, General Procedures).

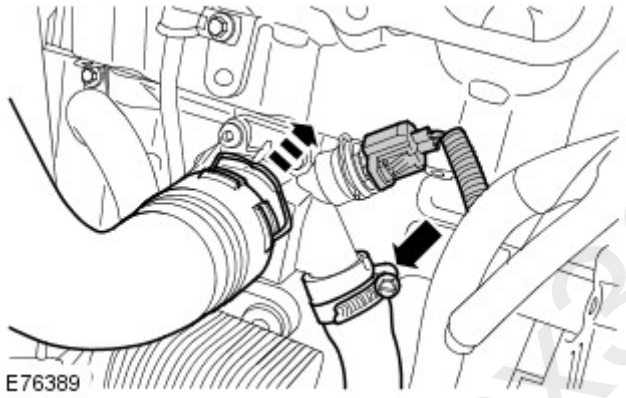


4.

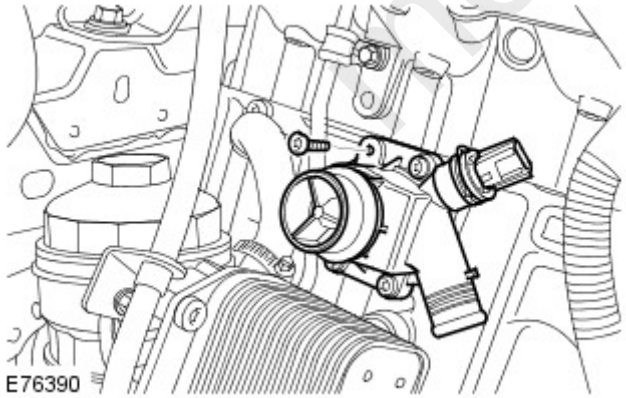


5. *Torque:* 10 Nm

6. Remove the thermostat.

7. Remove and discard the gasket.

mcx30.com

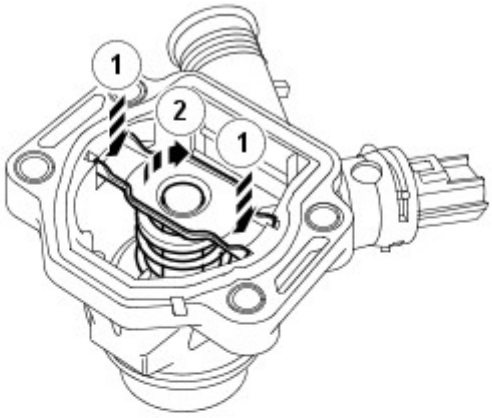


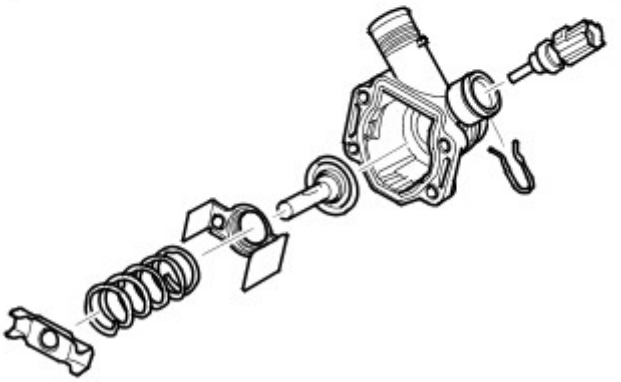

E76391

8. **8.** NOTE: Do not disassemble further if the component is removed for access only.

   Remove the ECT sensor.

## Installation

1. **1.** CAUTION: Make sure that the mating faces are clean and free of foreign material.

   To install, reverse the removal procedure.

2. **2.** NOTE: For NAS vehicles only.

   If required, carry out a long drive cycle.

   Refer to: Powertrain Control Module (PCM) Long Drive Cycle Self-Test (303-14A, General Procedures).

mcx30.com

Published: 11-May-2011

# Engine Cooling - I6 3.2L Petrol - Coolant Pump

Removal and Installation

## Removal

1. Remove the cover and disconnect the battery ground cable.

   Refer to: Specifications (414-00 Battery and Charging System - General Information, Specifications).

2. Remove the engine cover.

   Refer to: Engine Cover - I6 3.2L Petrol (501-05 Interior Trim and Ornamentation, Removal and Installation).

3. Remove the battery tray.

   Refer to: Battery Tray (414-01 Battery, Mounting and Cables, Removal and Installation).

4. Remove the air cleaner assembly.

   Refer to: Air Cleaner (303-12A Intake Air Distribution and Filtering - I6 3.2L Petrol, Removal and Installation).

5. Drain the coolant.

   Refer to: Cooling System Draining, Filling and Bleeding (303-03A Engine Cooling - I6 3.2L Petrol, General Procedures).

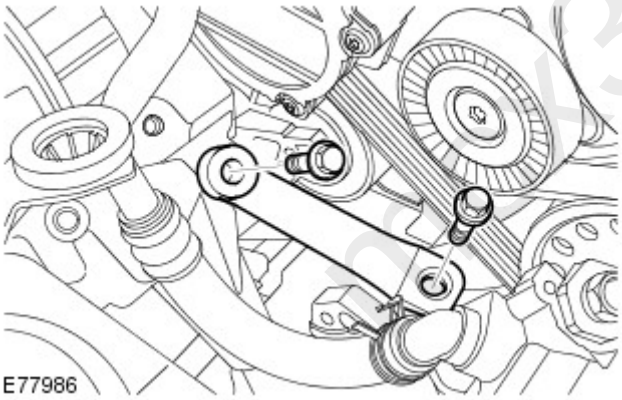


6. Remove the A/C compressor, lower support bracket.

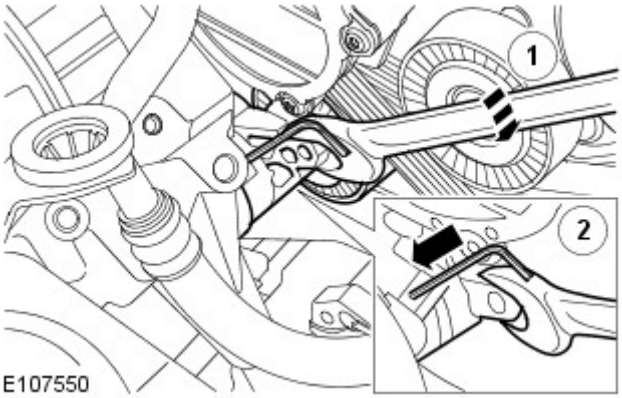


7. Using suitable tools, release the accessory drive belt tension.

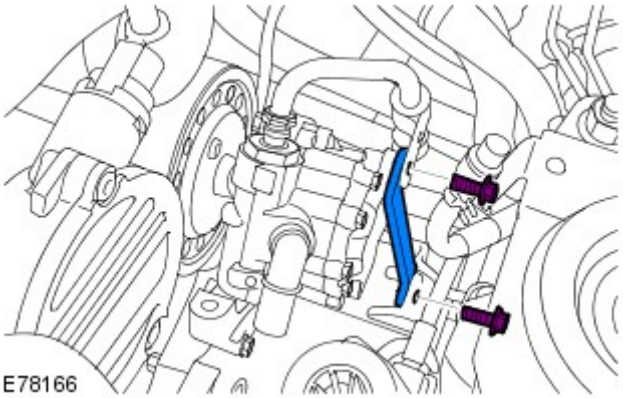


8. Remove the power steering pump support bracket

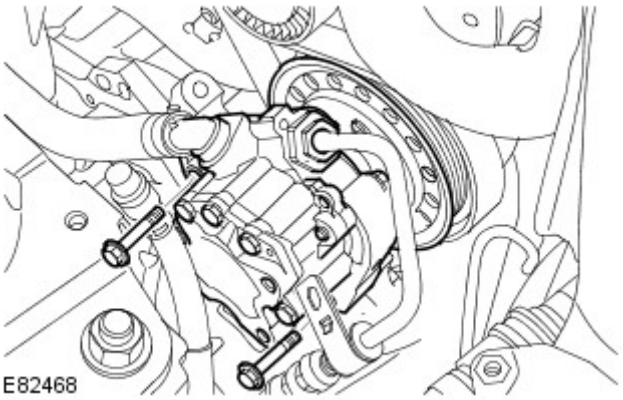


9. Release the power steering pump.

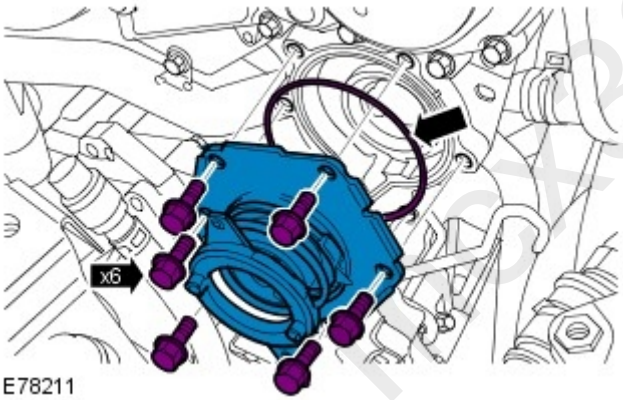


10. **10.** NOTE: Discard the gasket.

    Remove the coolant pump.

## Installation

1. **1.** NOTE: Install a new gasket.

   Install the coolant pump.

   *Torque:* 17 Nm

2. **2.** CAUTION: The accessory drive belt must be in position before the power steering pump is installed.

   Install the power steering pump.

   *Torque:* 25 Nm

3. Install the power steering pump support bracket.

   *Torque:* 25 Nm

4. Install the accessory drive belt.

fox30.com

5. Install the A/C compressor, lower support bracket.

   *Torque:* 25 Nm

6. Install the air cleaner assembly.

   Refer to: Air Cleaner (303-12A Intake Air Distribution and Filtering - I6 3.2L Petrol, Removal and Installation).

7. Install the battery tray.

   Refer to: Battery Tray (414-01 Battery, Mounting and Cables, Removal and Installation).

8. Install the engine cover.

   Refer to: Engine Cover - I6 3.2L Petrol (501-05 Interior Trim and Ornamentation, Removal and Installation).

9. Connect the battery ground cable and install the cover.

   Refer to: Specifications (414-00 Battery and Charging System - General Information, Specifications).

10. Fill and bleed the cooling system.

    Refer to: Cooling System Draining, Filling and Bleeding (303-03A Engine Cooling - I6 3.2L Petrol, General Procedures).

mcx30.com

Published: 11-May-2011

# Engine Cooling - I6 3.2L Petrol - Radiator

Removal and Installation

## Removal

1. **1.** WARNING: Make sure to support the vehicle with axle stands.

   Raise and support the vehicle.

2. Remove the bumper armature.

   Refer to: Front Bumper (501-19 Bumpers, Removal and Installation).

3. Drain the cooling system.

   Refer to: Cooling System Draining, Filling and Bleeding (303-03A Engine Cooling - I6 3.2L Petrol, General Procedures).

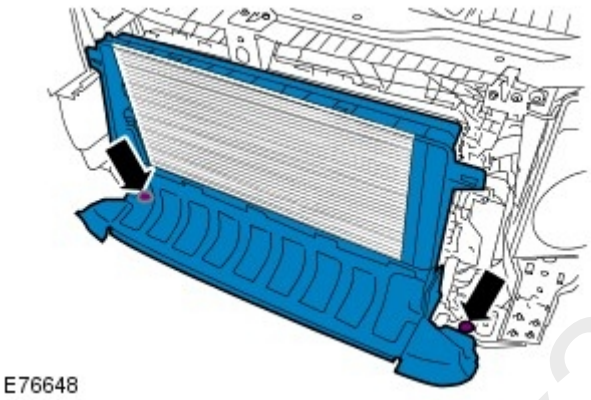


4.

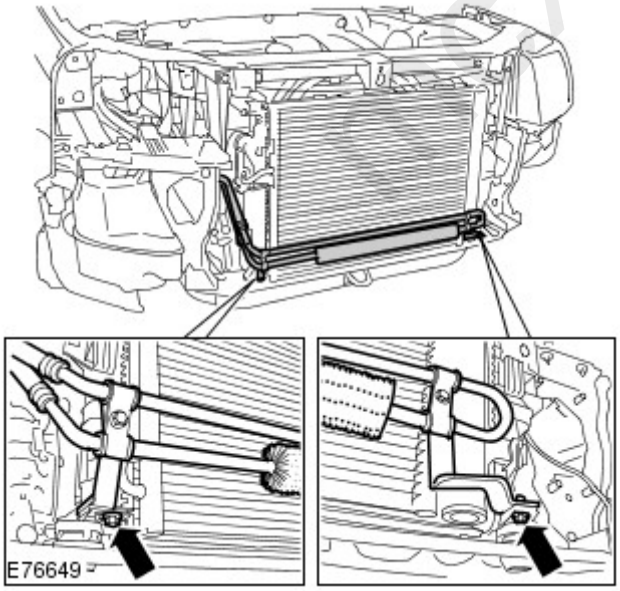


5. Release power steering cooler and secure aside.

ex30.com

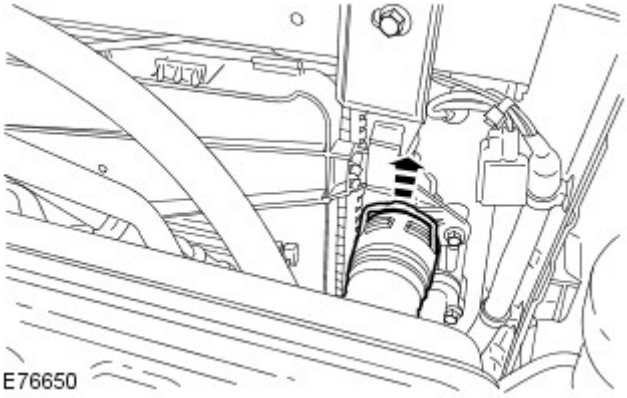


6.

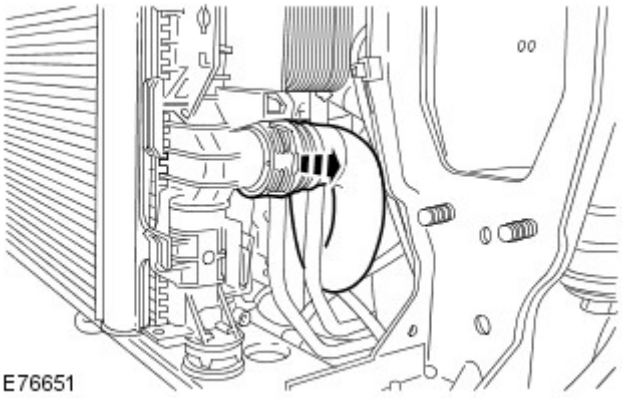


7.

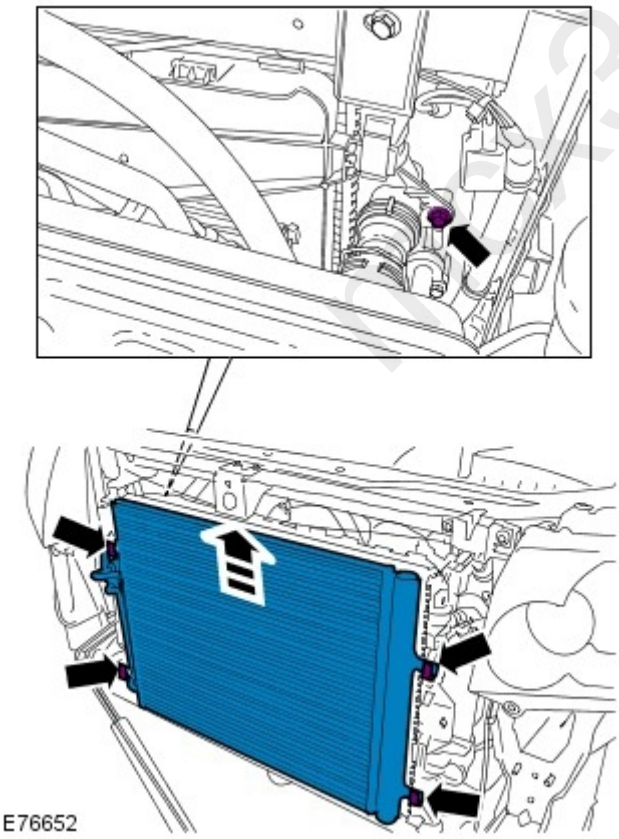


8. **8.** CAUTION: Protect the A/C condenser.

Release the A/C condenser and position aside.

mx30.com

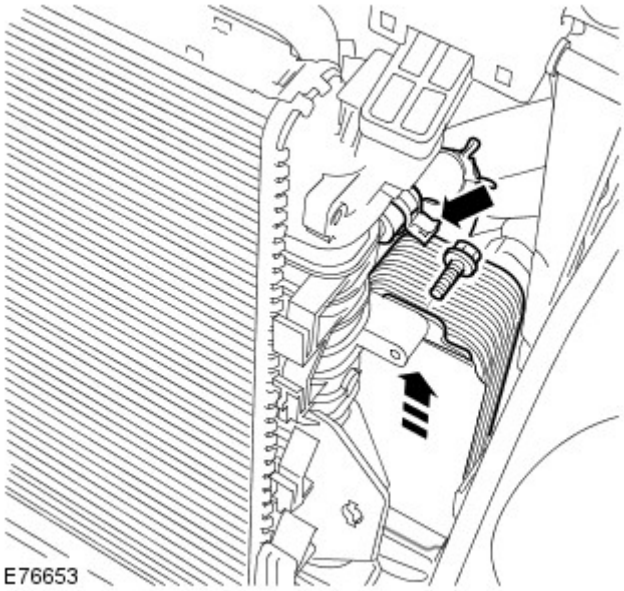


9. Release the automatic transmission fluid cooler and tie aside.

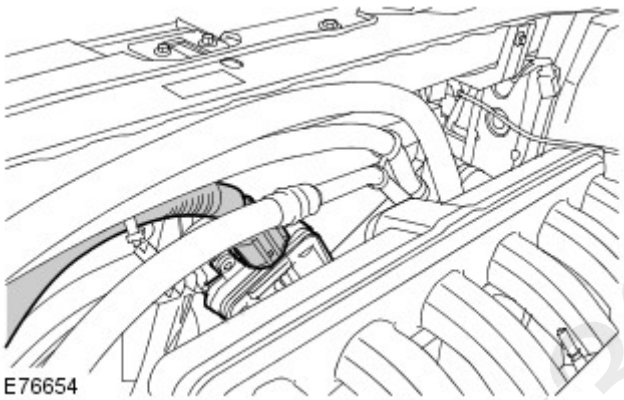


10.

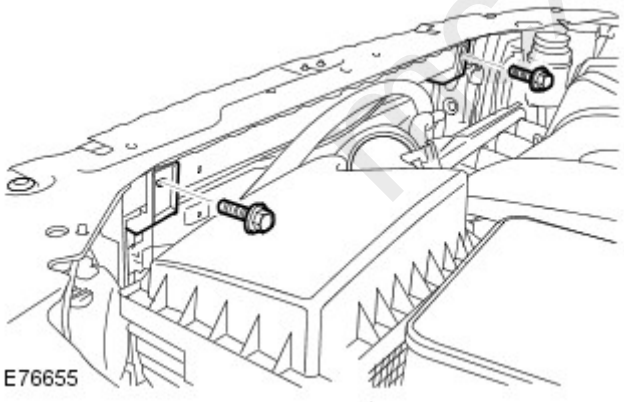


11.

rscx30.com

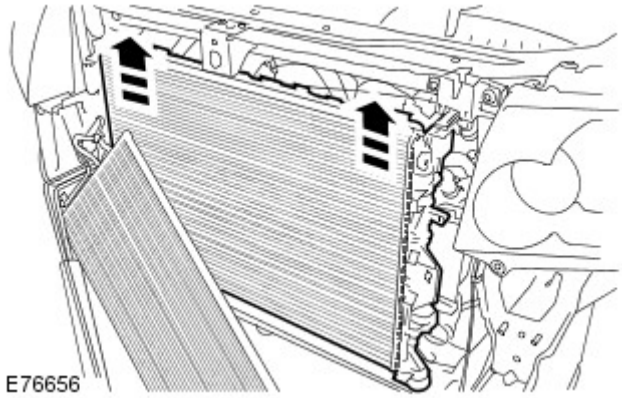


12. **12.** CAUTION: Protect the radiator during this operation.

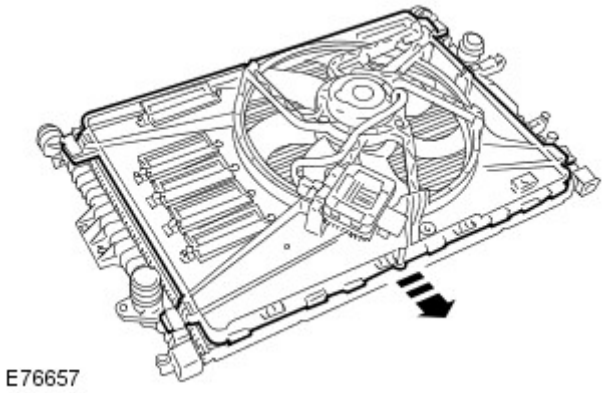


13. **13.** NOTE: Do not disassemble further if the component is removed for access only.

14.

## Installation

1. Install the rubber mounts.
2. Install the cooling fan assembly.
3. Carefully install the radiator.
4. Install the A/C condenser, and tighten the bolt.

   *Torque:* 10 Nm

5. Install the mountings and tighten the bolts.

   *Torque:* 6 Nm

mck30.com

6. Connect and secure the electrical connector.

7. Install the automatic transmission fluid cooler.

8. Connect the coolant top hose.

9. Connect the coolant lower hose.

10. Install the PAS cooler and tighten the bolts.

    *Torque:* 10 Nm

11. Install the air deflector.

12. Fill and bleed the cooling system.

    Refer to: Cooling System Draining, Filling and Bleeding (303-03A Engine Cooling - I6 3.2L Petrol, General Procedures).

13. Install the bumper.

    Refer to: Front Bumper (501-19 Bumpers, Removal and Installation).

mcx30.com

Published: 11-May-2011

# Engine Cooling - I6 3.2L Petrol - Cooling Fan

Removal and Installation

## Removal

1. **1.** WARNING: Make sure to support the vehicle with axle stands.

   Raise and support the vehicle.

2. **2.** CAUTION: After switching off the ignition, wait for 2 minutes before disconnecting the battery. Failure to wait for 2 minutes will damage the navigation computer.

   Disconnect the battery ground cable.

   Refer to: Specifications (414-00 Battery and Charging System - General Information, Specifications).

3. Remove the intake manifold.

   Refer to: Intake Manifold (303-01A Engine - I6 3.2L Petrol, Removal and Installation).

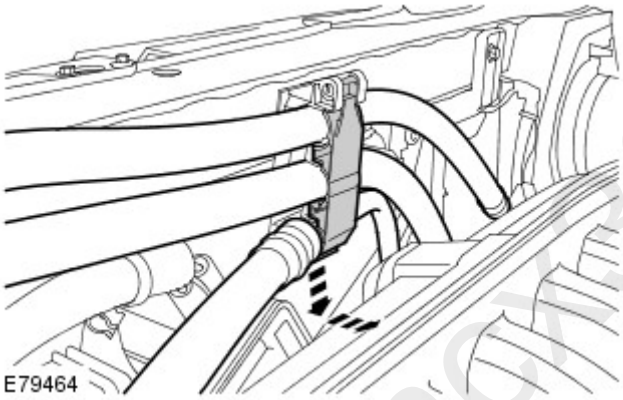


4. Release the A/C and power steering pipes.

5. Remove the A/C line support bracket.

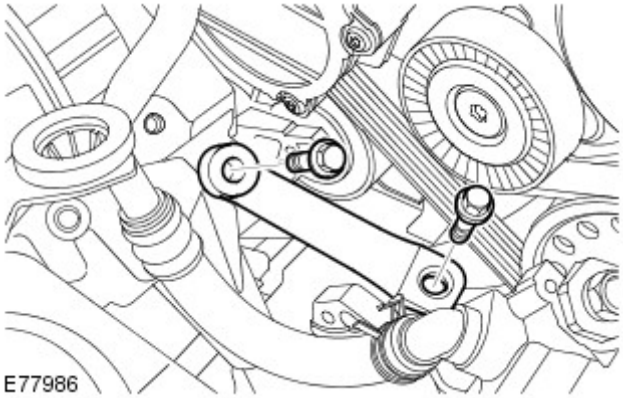


6. Remove the A/C compressor, lower support bracket.

mex30.com

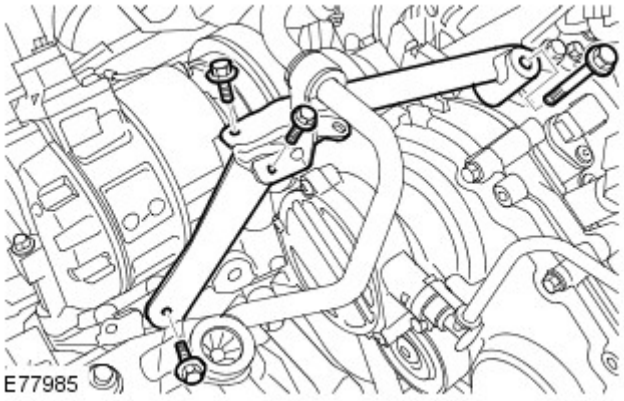


7. Remove the A/C compressor, upper support bracket.

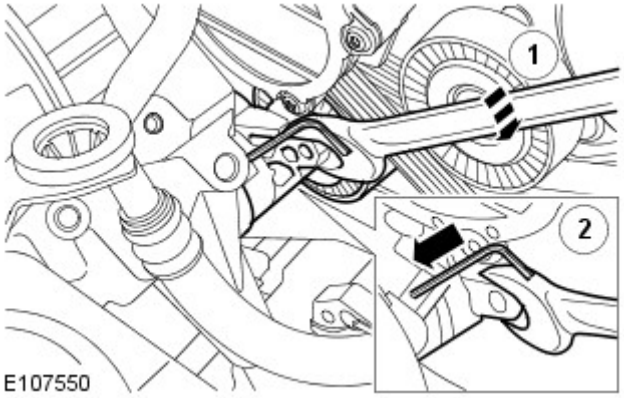


8. Using suitable tools, release the accessory drive belt tension.

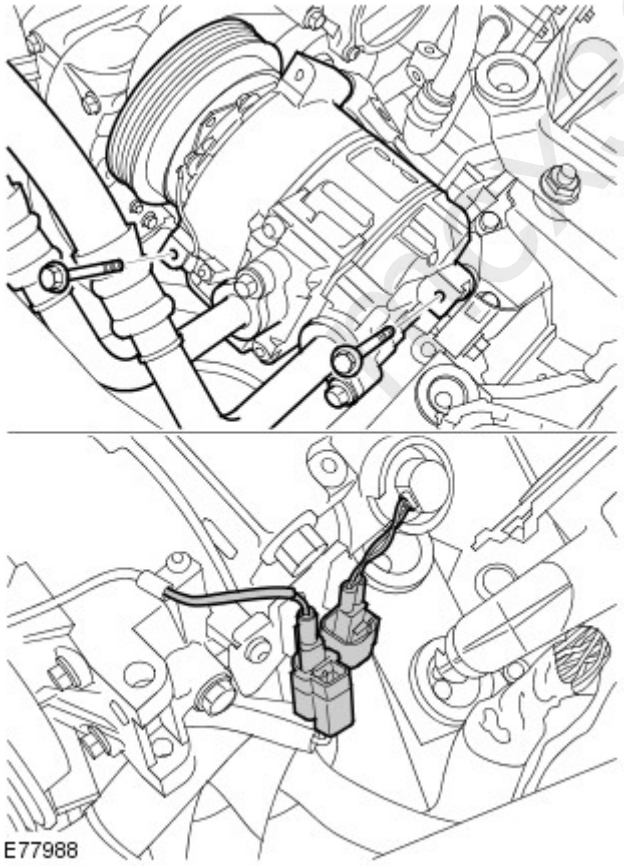


9. Release the A/C compressor and position aside.

Flex30.com

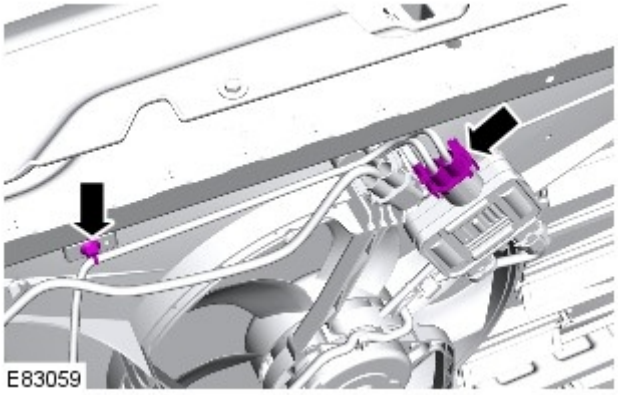


10. Disconnect the cooling fan control electrical connector.

11. Release the cooling fan wiring harness.

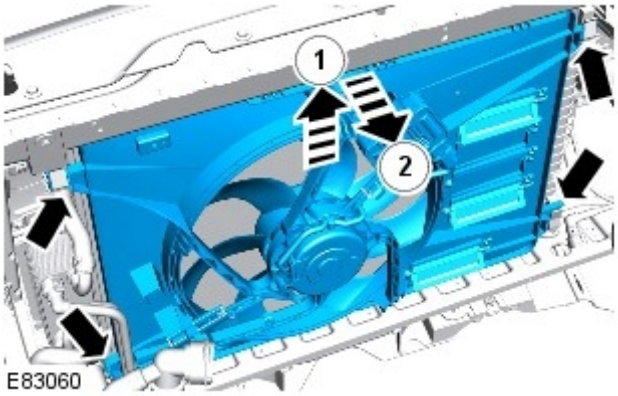


12. Remove the cooling fan assembly.

## Installation

1. Install the cooling fan assembly.

2. Install the A/C compressor.

   *Torque:* 25 Nm

3. Install the A/C compressor, upper support bracket.

   *Torque:*
   M10 45 Nm
   M8 25 Nm
   M6 10 Nm

4. Install the accessory drive belt.

5. Install the A/C compressor, lower support bracket.

   *Torque:* 25 Nm

6. Install the A/C line support bracket.

   *Torque:* 10 Nm

7. Secure the A/C pipes.

8. Secure the cooling fan harness.

mcx30.com

9. Connect the cooling fan electrical connector.

10. Install the intake manifold.

    Refer to: Intake Manifold (303-01A Engine - I6 3.2L Petrol, Removal and Installation).

11. Connect the battery ground cable.

    Refer to: Specifications (414-00 Battery and Charging System - General Information, Specifications).

mcx30.com

Published: 11-May-2011

# Engine Cooling - I6 3.2L Petrol - Cooling Fan Module

Removal and Installation

## Removal

• NOTE: Petrol illustration shown, diesel similar.

1. Remove the cover and disconnect the battery ground cable.

   Refer to: Specifications (414-00 Battery and Charging System - General Information, Specifications).

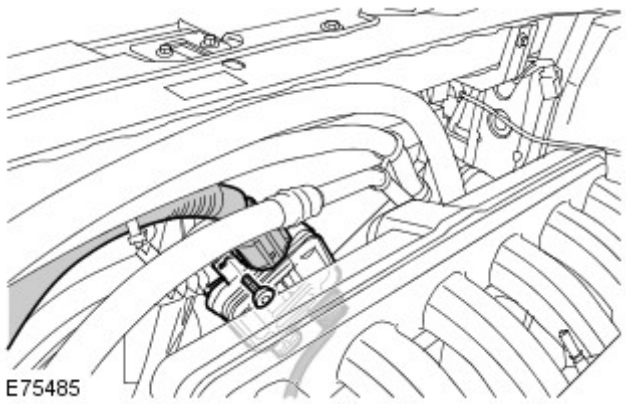


2.
   - Remove the cooling fan module.
   - *Torque:* 6 Nm

## Installation

1. To install, reverse the removal procedure.

mcx30.com

Published: 11-May-2011

# Engine Cooling - I6 3.2L Petrol - Coolant Expansion Tank

Removal and Installation

## Removal

WARNING: When releasing the cooling system pressure, cover the coolant expansion tank cap with a thick cloth.

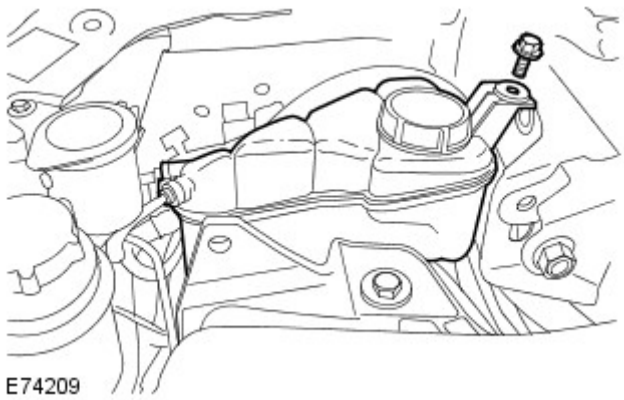


1. *Torque:* 10 Nm

2. Clamp the relevant hose, to minimise coolant loss.

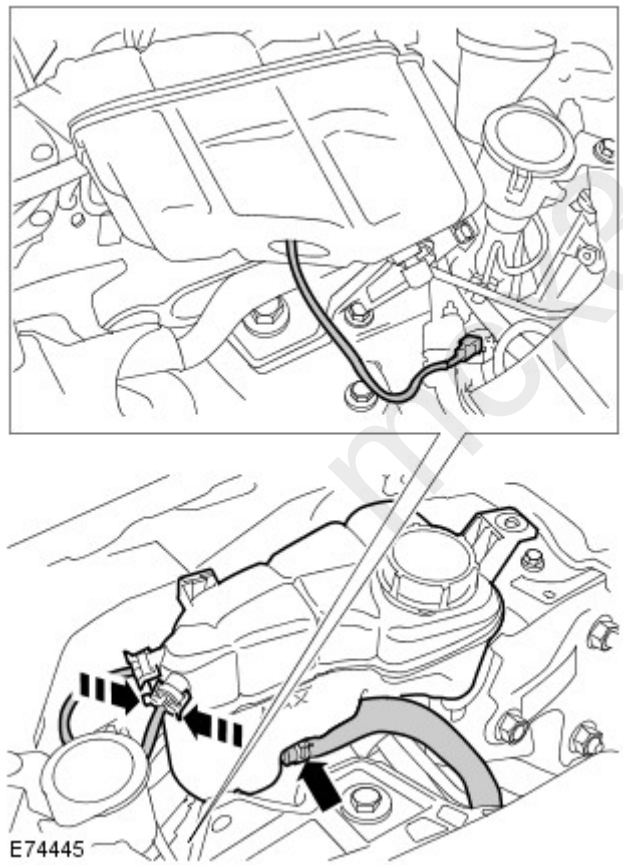


3. **3.** CAUTION: Be prepared to collect escaping coolant.

4. **4.** NOTE: Do not disassemble further if the component is removed for access only.

## Installation

1. To install, reverse the removal procedure.

2. Top-up the coolant.

mcx30.com

Published: 11-May-2011

# Engine Cooling - I6 3.2L Petrol - Engine Coolant Level Switch

Removal and Installation

## Removal

- NOTE: Removal steps in this procedure may contain installation details.

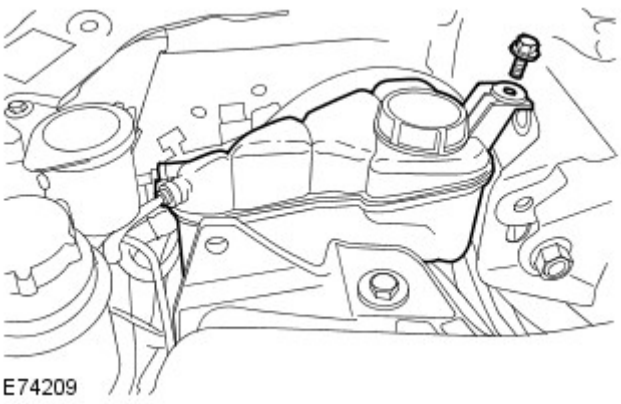


1. *Torque:* 10 Nm

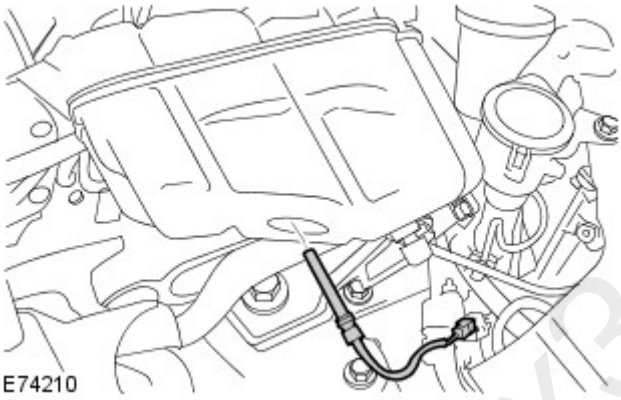


2.

## Installation

1. To install, reverse the removal procedure.

mcx30.com